ZENUNO15 5 I-F BBL

ZU/5/IF/U15/S/BBL/153
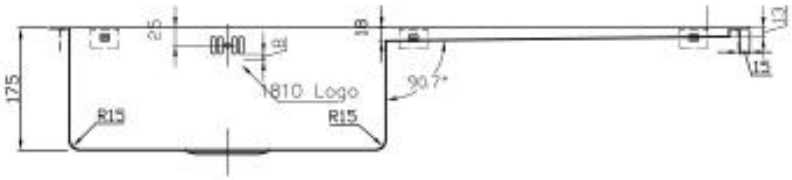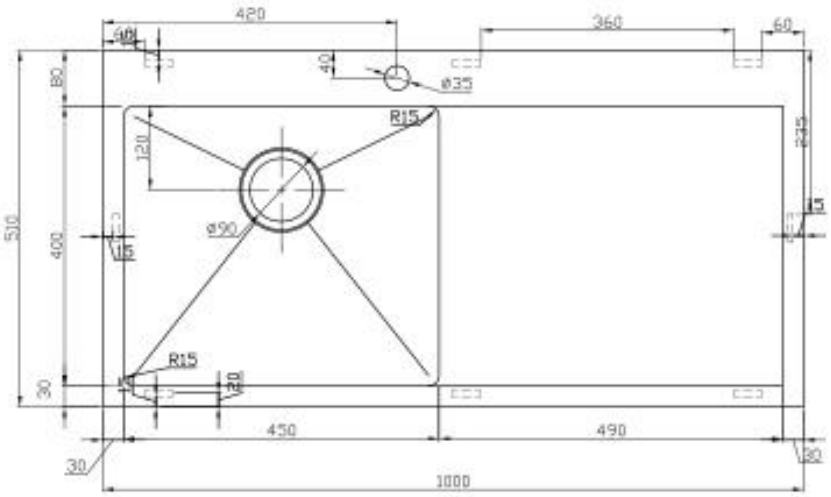
- Handmade 15mm radius inset bowl, can also be flushfit or undermounted.
- Satin finish.
- Insusound®.
- 3 ½” basket strainer waste and overflow included.
- Steel thickness 1.2mm.
- Maximiser plumbing kit included.
- Minimum cabinet size: 500mm.