ZENUNO15 34 I-F ACCESSIBLE BBL

ZU/34/IF/U15/S/BBL/160
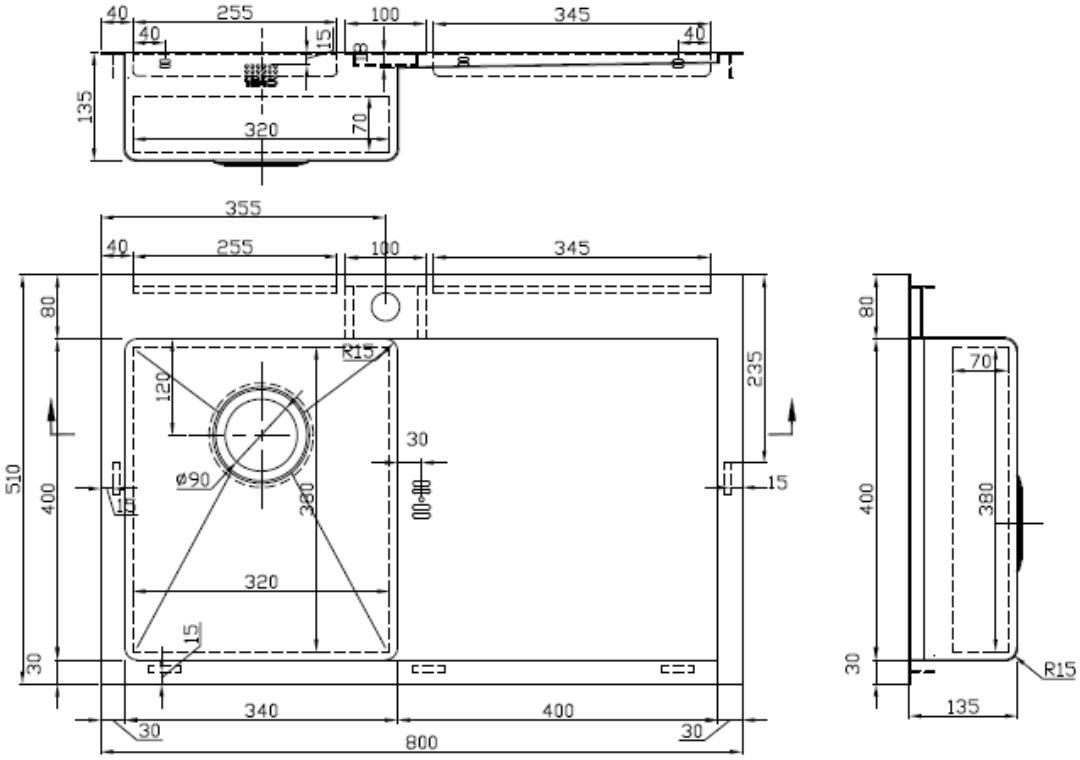
- Handmade 15mm radius inset bowls.
- Satin finish.
- Insusound®.
- 3 ½” basket strainer waste and overflow included.
- Steel thickness 1.2mm.
- Maximiser plumbing kit included.